# CSA200 Series

## WIR one side with Locking Collar - Cylindrical OD

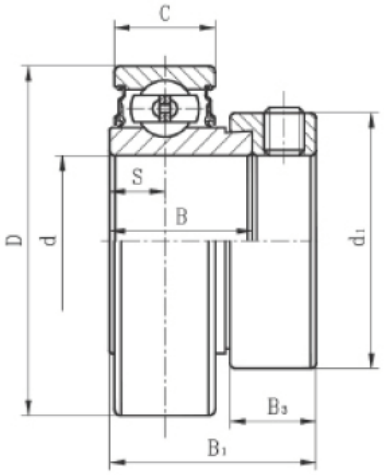


| Part No. | Dimensions(mm / inch) | | | | | | | | Basic Loads (KN) | | N.W. (kg) |
|---|---|---|---|---|---|---|---|---|---|---|---|
| | d (mm) | d (inch) | D | B1 | C | S | B3 | d1 | Cr | Cor | |
| CSA201-8 | - | 0.5 | 40 | 28.6 | 12 | 6 | 0.1417 | 1.126 | 7.36 | 4.48 | 0.14 |
| CSA202-10 | - | 0.625 | 40 | 28.6 | 12 | 6 | 0.1417 | 1.126 | 7.36 | 4.48 | 0.135 |
| CSA203 | 17 | - | 40 | 28.6 | 12 | 6 | 3.6 | 28.6 | 7.36 | 4.48 | 0.13 |
| CSA204 | 20 | - | 47 | 29.5 | 14 | 7 | 3.9 | 33.3 | 9.88 | 6.2 | 0.15 |
| CSA204-12 | - | 0.75 | 47 | 29.5 | 14 | 7 | 0.1513 | 1.311 | 9.88 | 6.2 | 0.15 |
| CSA205 | 25 | - | 52 | 30.5 | 15 | 7.5 | 3.9 | 38.1 | 10.78 | 6.98 | 0.22 |
| CSA205-14 | - | 0.875 | 52 | 30.5 | 15 | 7.5 | 0.1513 | 1.5 | 10.78 | 6.98 | 0.22 |
| CSA205-16 | - | 1 | 52 | 30.5 | 15 | 7.5 | 0.1513 | 1.5 | 10.78 | 6.98 | 0.22 |
| CSA206 | 30 | - | 62 | 33.9 | 16 | 8 | 5 | 44.5 | 14.97 | 10.04 | 0.3 |
| CSA206-18 | - | 1.125 | 62 | 33.9 | 16 | 8 | 0.1969 | 1.752 | 14.97 | 10.04 | 0.3 |
| CSA206-20 | - | 1.25 | 62 | 33.9 | 16 | 8 | 0.1969 | 1.752 | 14.97 | 10.04 | 0.3 |
| CSA207 | 35 | - | 72 | 37.5 | 18 | 9 | 5.5 | 55.6 | 19.75 | 13.67 | 0.5 |
| CSA207-20 | - | 1.25 | 72 | 37.5 | 18 | 9 | 0.2165 | 2.189 | 19.75 | 13.67 | 0.5 |
| CSA207-22 | - | 1.375 | 72 | 37.5 | 18 | 9 | 0.2165 | 2.189 | 19.75 | 13.67 | 0.5 |
| CSA208 | 40 | - | 80 | 40.5 | 19 | 9.5 | 6 | 60.3 | 22.71 | 15.94 | 0.67 |
| CSA208-24 | - | 1.5 | 80 | 40.5 | 19 | 9.5 | 0.2362 | 2.374 | 22.71 | 15.94 | 0.67 |



Every effort has been taken to ensure that the data listed in this catalogue is correct.
Finer Power Transmissions P/L will not accept liability for any damage or loss caused as a result of the data in this catalogue.