HA200 Series

Hanger Housing

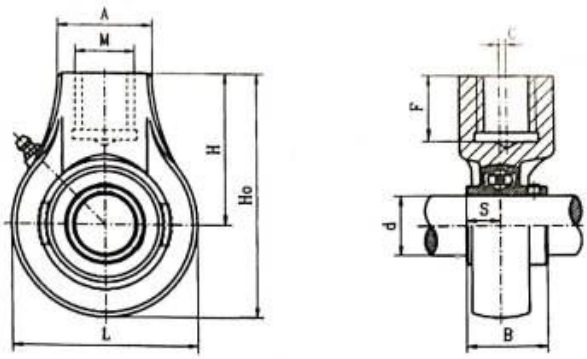

Part No.	Dimensions (mm)										Weight (kg)
	d	Ho	L	C	H	A	F	M	B	S	
HA204	20	96	64	0	64	40	19	PF 3/4	31	12.7	0.7
HA205	25	103	78	0	64	40	19	PF 3/4	34.1	14.3	0.88
HA206	30	103	78	0	64	40	19	PF 3/4	38.1	15.9	1
HA207	35	116	92	0	70	40	19	PF 3/4	42.9	17.5	1.2
HA208	40	121	96	2	73	40	19	PF 3/4	49.2	19	1.3
HA209	45	136	108	5	82	48	21	PF 3/4	49.2	19	1.8
HA210	50	140.5	115	5	82	48	21	PF 3/4	49.2	19	1.8
HA211	55	150	126	7	87	60	24	PF 3/4	55.6	22.2	2.8
HA212	60	173	142	9	102	60	28	PF 3/4	65.1	25.4	3.9

FB200 Series

3-Bolt Flanged Bracket Housing

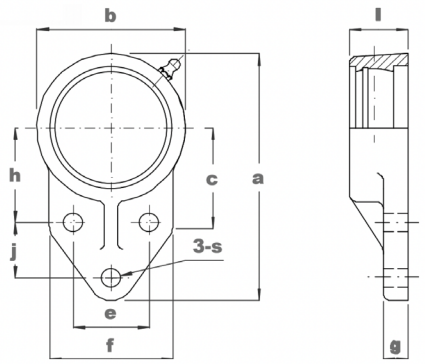

Part No.	Dimensions (mm)											N.W. (kg)
	a	h	e	j	g	l	c	s	b	f	Bolt	
FB204	110	42	32	27	13	25.5	52	10	62	52	M8	0.45
FB205	116	45	34	27	13	27	52	10	68	56	M8	0.5
FB206	130	50	40	29	13	31	55	10	78	65	M8	0.62
FB207	144	55	46	32	15	34	62	10	90	70	M8	0.84
FB208	164	60	50	41	16	36	72	12	100	78	M10	1.17
FB209	174	65	54	43	18	38	76	12	106	80	M10	1.32
FB210	184	68	58	46	18	40	82	12	112	86	M10	1.52

NB. Finer Power Transmissions P/L is transitioning into NBR Bearings. Unless NBR Bearings are specifically requested, any remaining PFB/TNC stock will be supplied.

Every effort has been taken to ensure that the data listed in this catalogue is correct.
Finer Power Transmissions P/L will not accept liability for any damage or loss caused as a result of the data in this catalogue.