FYH
Finer Power Transmissions P/L | www.finerpt.com
Bearing Housings
PX00 Series

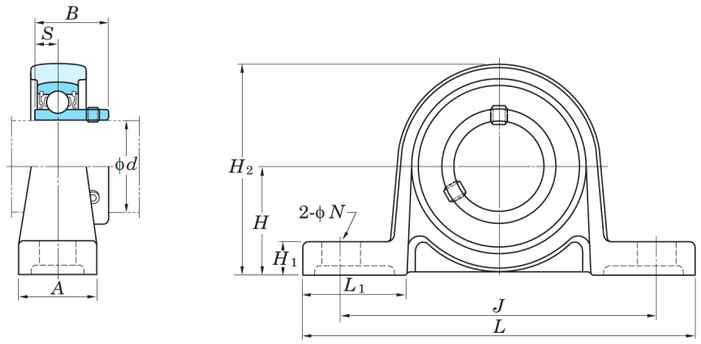

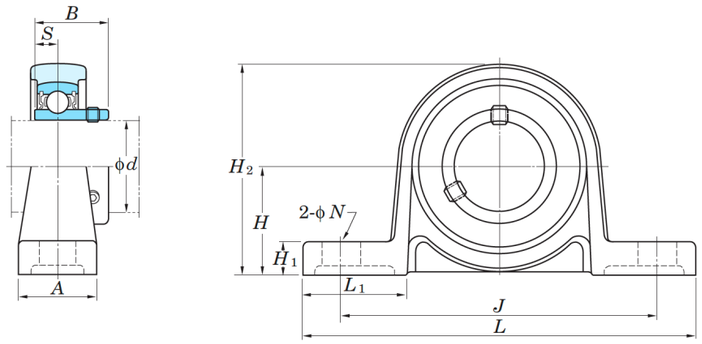

Housing Number	Dimensions																						Bolt Size	
	H		L		A		J		N		N1		H1		H2		L1		B		S			
	mm	inch	mm	inch	mm	inch	mm	inch	mm	inch	mm	inch	mm	inch	mm	inch	mm	inch	mm	inch	mm	inch	mm	inch
PX05	44.4	1.75	159	6.25	51	2	119	4.688	17	0.656	25	0.969	16	0.625	86	3.375	47	1.844	38.1	1.5	15.9	0.626	M14	0.5
PX06	47.6	1.875	175	6.875	57	2.25	127	5	17	0.656	25	0.969	17	0.656	93	3.656	55	2.156	42.9	1.689	17.5	0.689	M14	0.5
PX07	54	2.125	203	8	57	2.25	144	5.656	17	0.656	30	1.188	19	0.75	105	4.125	64	2.531	49.2	1.937	19	0.748	M14	0.5
PX08	58.7	2.313	222	8.75	67	2.625	156	6.156	20	0.781	32	1.25	21	0.813	114	4.5	71	2.781	49.2	1.937	19	0.748	M16	0.625
PX09	58.7	2.313	222	8.75	67	2.625	156	6.156	20	0.781	33	1.312	21	0.813	116	4.563	71	2.781	51.6	2.031	19	0.748	M16	0.625
PX10	63.5	2.5	241	9.5	73	2.785	171	6.719	20	0.781	36	1.406	22	0.875	126	4.969	76	3	55.6	2.189	22.2	0.874	M16	0.625
PX11	69.8	2.75	260	10.25	79	3.125	184	7.25	25	0.969	36	1.406	28	1.094	139	5.469	83	3.281	65.1	2.563	25.4	1	M20	0.75
PX12	76.2	3	286	11.25	83	3.25	203	8	25	0.969	40	1.563	28	1.094	152	5.969	88	3.469	65.1	2.563	25.4	1	M20	0.75
PX13	76.2	3	286	11.25	83	3.25	203	8	25	0.969	40	1.563	28	1.094	155	6.094	88	3.469	74.6	2.937	30.2	1.189	M20	0.75
PX14	88.9	3.5	330	13	89	3.5	229	9	27	1.063	50	1.969	32	1.25	171	6.719	98	3.844	77.8	3.063	33.3	1.331	M22	0.875
PX15	88.9	3.5	330	13	89	3.5	229	9	27	1.063	50	1.969	32	1.25	175	6.875	99	3.906	82.6	3.252	33.3	1.311	M22	0.875
PX16	101.6	4	381	15	102	4	283	11.125	27	1.063	58	2.281	34	1.344	195	7.688	116	4.563	85.7	3.374	34.1	1.343	M22	0.875
PX17	101.6	4	381	15	102	4	283	11.125	27	1.063	60	2.375	34	1.344	200	7.875	116	4.563	96	3.78	39.7	1.563	M22	0.875
PX18	101.6	4	381	15	111	4.375	283	11.125	27	1.063	60	2.375	38	1.5	204	8.031	116	4.563	104	4.094	42.9	1.689	M22	0.875
PX20	127	5	432	17	121	4.75	337	13.25	33	1.313	65	2.563	45	1.781	245	9.656	126	4.969	117.5	4.626	49.2	1.937	M27	1

Every effort has been taken to ensure that the data listed in this catalogue is correct.
Finer Power Transmissions P/L will not accept liability for any damage or loss caused as a result of the data in this catalogue.
Every effort has been taken to ensure that the data listed in this catalogue is correct.
Finer Power Transmissions P/L will not accept liability for any damage or loss caused as a result of the data in this catalogue.

FYH
Finer Power Transmissions P/L | www.finerpt.com
Bearing Housings
FX00 Series

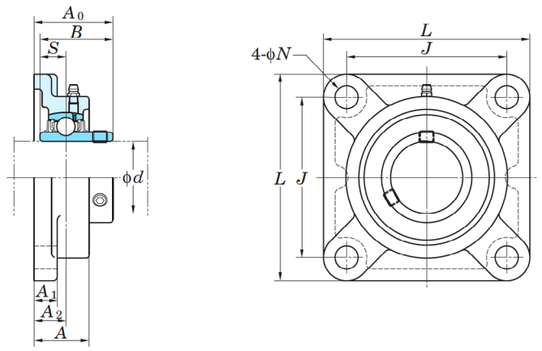

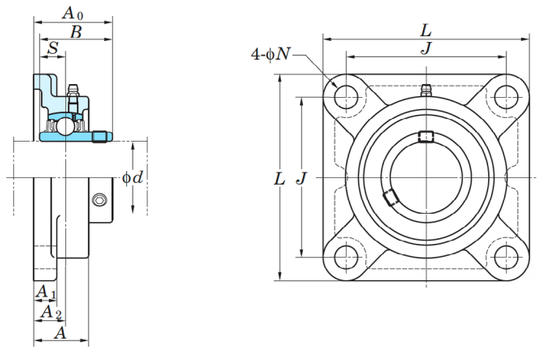

Housing Number	Dimensions																				Bolt Size	
	L		A		J		N			A1		A2		A0		B		S				
	mm	inch	mm	inch	mm	inch	mm	inch		mm	inch	mm	inch	mm	inch	mm	inch	mm	inch		mm	inch
FX05	108	4.25	30	1.188	83	3.266	12	0.469		13	0.5	18	0.703	40.2	1.594	38.1	1.5	15.9	0.626		M10	0.375
FX06	117	4.594	34	1.344	92	3.625	16	0.625		14	0.563	19	0.75	44.4	1.75	42.9	1.689	17.5	0.689		M14	0.5
FX07	130	5.125	38	1.5	102	4.016	16	0.625		14	0.563	21	0.828	51.2	2.031	49.2	1.937	19	0.748		M14	0.5
FX08	137	5.406	40	1.563	105	4.141	19	0.75		14	0.563	22	0.859	52.2	2.063	49.2	1.937	19	0.748		M16	0.625
FX09	143	5.625	40	1.563	111	4.375	19	0.75		14	0.563	23	0.906	55.6	2.188	51.6	2.031	19	0.748		M16	0.625
FX10	162	6.375	44	1.719	130	5.125	19	0.75		20	0.781	26	1.031	59.4	2.344	55.6	2.189	22.2	0.874		M16	0.625
FX11	175	6.875	49	1.938	143	5.625	19	0.75		20	0.781	29	1.141	68.7	2.719	65.1	2.563	25.4	1		M16	0.625
FX12	187	7.375	59	2.313	149	5.859	19	0.75		21	0.813	34	1.344	73.7	2.906	65.1	2.563	25.4	1		M16	0.625
FX13	187	7.375	59	2.313	149	5.859	19	0.75		21	0.813	34	1.344	78.4	2.094	74.6	2.937	30.2	1.189		M16	0.625
FX14	197	7.75	60	2.375	152	5.985	23	0.906		22	0.875	37	1.453	81.5	3.219	77.8	3.063	33.3	1.331		M20	0.75
FX15	197	7.75	68	2.688	152	5.984	23	0.906		24	0.938	40	1.563	89.3	3.531	82.6	3.252	33.3	1.311		M20	0.75
FX16	214	8.438	70	2.75	171	6.734	23	0.906		24	0.938	40	1.563	91.6	3.594	85.7	3.374	34.1	1.343		M20	0.75
FX17	214	8.438	70	2.75	171	6.734	23	0.906		24	0.938	40	1.563	96.3	3.781	96	3.78	39.7	1.563		M20	0.75
FX18	214	8.438	76	3	171	6.734	23	0.906		24	0.938	45	1.766	106.1	4.188	104	4.094	42.9	1.689		M20	0.75
FX20	268	10.563	97	3.813	211	8.313	31	1.219		28	1.094	59	2.328	127.3	5	117.5	4.626	49.2	1.937		M27	1

Every effort has been taken to ensure that the data listed in this catalogue is correct.
Finer Power Transmissions P/L will not accept liability for any damage or loss caused as a result of the data in this catalogue.
Every effort has been taken to ensure that the data listed in this catalogue is correct.
Finer Power Transmissions P/L will not accept liability for any damage or loss caused as a result of the data in this catalogue.