SBH200 Series

Heavy 2-Bolt Saw Bench Housing

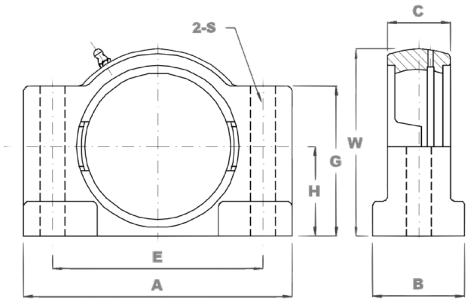

Part No.	Dimensions (mm)									Weight (kg)
	H	A	E	B	C	G	W	S	Bolt	
SBH205	31.7	92	70	38	25	58	67	12	M10	0.75
SBH206	38.1	108	83	44	30	68	78	12	M10	1.20
SBH207	44.4	133	102	48	33	76	95	14	M12	1.90
SBH208	47.6	140	108	54	39	81	100	14	M12	2.10
SBH209	50.8	146	111	54	39	86	105	14	M12	2.40
SBH210	53.97	152	118	60	41	90	110	14	M12	2.70
SBH211	58.7	172	137	60	41	98	122	17	M16	3.50
SBH212	69.85	197	162	65	48	111	146	17	M16	5.02
SBH213	69.85	197	162	65	48	111	146	17	M16	4.64
SBH214	76.2	206	172	73	60	117	155	17	M16	5.21
SBH215	76.2	206	172	73	60	117	155	17	M16	5.78

FC200 Series (Light Duty)

4-Bolt Round Flanged Cartridge Housing

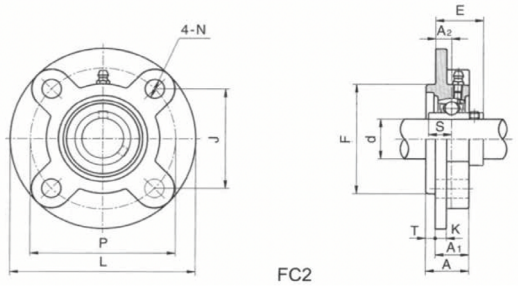

Part No.	Dimensions (mm)													N.W. (kg)
	d	L	P	J	A2	A1	A	T	K	F	N	E	S	
FC204	20	100	78	55.1	10	20.5	25.5	5	7	62	12	28.3	12.7	0.58
FC205	25	115	90	63.6	10	21	27	6	7	70	12	29.8	14.3	0.74
FC206	30	125	100	70.7	10	23	31	8	8	80	12	32.2	15.9	0.93
FC207	35	135	110	77.8	11	26	34	8	9	90	14	36.4	17.5	1.2
FC208	40	145	120	84.8	11	26	36	10	9	100	14	41.2	19	1.41
FC209	45	160	132	93.3	10	26	38	12	14	105	16	40.2	19	1.95
FC210	50	165	138	97.6	10	28	40	12	14	110	16	42.6	19	2.12
FC211	55	185	150	106.1	13	31	43	12	15	125	19	46.4	22.2	3.05
FC212	60	195	160	113.1	17	36	48	12	15	135	19	56.7	25.4	3.57
FC213	65	205	170	120.2	16	36	50	14	15	145	19	55.7	25.4	3.74
FC214	70	215	177	125.1	17	40	54	14	18	150	19	61.4	30.2	4.8
FC215	75	220	184	130.1	18	40	56	16	18	160	19	62.5	33.3	5.2
FC216	80	240	200	141.4	18	42	58	16	18	170	23	67.3	33.3	6.3
FC217	85	250	208	147.1	18	45	63	18	20	180	23	69.6	34.1	7.37
FC218	90	265	220	155.5	22	50	68	18	20	190	23	78.3	39.7	8.6

Every effort has been taken to ensure that the data listed in this catalogue is correct.
Finer Power Transmissions P/L will not accept liability for any damage or loss caused as a result of the data in this catalogue.