FYH
Finer Power Transmissions P/L | www.finerpt.com

Bearing Inserts
UCX00 Series

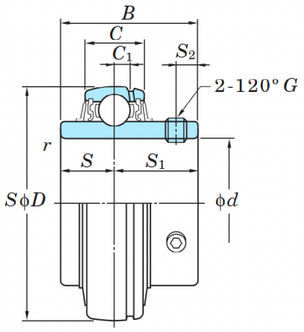

UCX

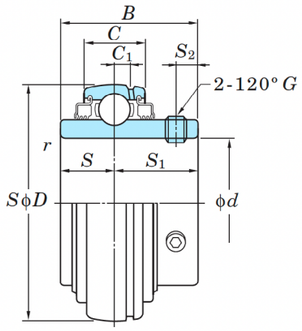

UCX-L3

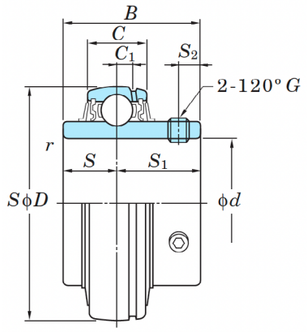

UCX

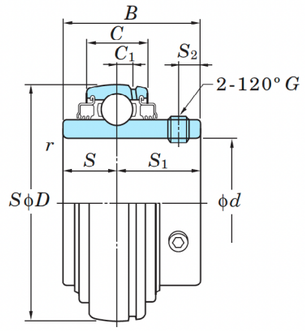

UCX-L3

Shaft Dia		Dimensions								Basic Load ratingskN		Factor	Bearing no.			Dimensions								Set Screw Brg. Bore		Mass kg
mm	inch	D		B		C		r (min.)								C1		S		S1		S2		G		
d		mm	inch	mm	inch	mm	inch	mm	inch	Cr	COr	f 0	Standard	L3 Type*		mm	inch	mm	inch	mm	inch	mm	inch	mm	inch	
-	1	62	2.441	38.1	1.5	19	0.748	1	0.039	19.5	11.3	13.9	UCX05-16	UCX05-16L3		5	0.197	15.9	0.626	22.2	0.874	6	0.236	–	1/4-28UNF	0.38
25	-	62	2.441	38.1	1.5	19	0.748	1	0.039	19.5	11.3	13.9	UCX05	UCX05L3		5	0.197	15.9	0.626	22.2	0.874	6	0.236	M6×0.75	–	0.39
30	-	72	2.835	42.9	1.689	20	0.787	1	0.039	25.7	15.4	13.9	UCX06	UCX06L3		6	0.217	19	0.689	25.4	1	6.5	0.256	M8×1	–	0.58
-	1 7/16	80	3.150	49.2	1.937	21	0.827	1.1	0.043	29.1	17.8	13.9	UCX207-23	UCX207-23L3		6	0.236	17.5	0.748	30.2	1.189	8	0.315	–	5/16-24UNF	0.72
35	-	80	3.150	49.2	1.937	21	0.827	1.1	0.043	29.1	17.8	13.9	UCX07	UCX07L3		5.5	0.236	19	0.748	30.2	1.189	8	0.315	M8×1	–	0.48
-	1 1/2	85	3.346	49.2	1.937	22	0.866	1.1	0.043	34.1	21.3	14	UCX08-24	UCX08-24L3		6	0.236	19	0.748	30.2	1.189	8	0.315	–	5/16-24UNF	0.87
40	-	85	3.346	49.2	1.937	22	0.866	1.1	0.043	34.1	21.3	14	UCX08	UCX08L3		6	0.236	19	0.748	30.2	1.189	8	0.315	M8×1	–	0.83
-	1 3/4	90	3.543	51.6	2.031	24	0.945	1.1	0.043	35.1	23.3	14.4	UCX09-28	UCX09-28L3		6	0.236	19	0.748	32.6	1.283	9	0.354	–	3/8-24UNF	0.97
45	-	90	3.543	51.6	2.031	24	0.945	1.1	0.043	35.1	23.3	14.4	UCX09	UCX09L3		6	0.236	19	0.748	32.6	1.283	9	0.354	M10×1.25	–	0.95
-	1 7/8	100	3.937	55.6	2.189	25	0.984	1.1	0.043	43.4	29.4	14.4	UCX10-30	-		7	0.276	22.2	0.874	33.4	1.315	9	0.354	-	3/8-24UNF	1.26
-	2	100	3.937	55.6	2.189	25	0.984	1.1	0.043	43.4	29.4	14.4	UCX10-32	UCX10-32L3		7	0.276	22.2	0.874	33.4	1.315	9	0.354	-	3/8-24UNF	1.26
50	-	100	3.937	55.6	2.189	25	0.984	1.1	0.043	43.4	29.4	14.4	UCX10	UCX10L3		7	0.276	22.2	0.874	33.4	1.315	9	0.354	M10x1.25	-	1.29
-	2	110	4.331	65.1	2.563	26	1.024	1.5	0.059	52.4	36.2	14.4	UCX11-32	-		7.5	0.295	25.4	1	39.7	1.563	10.5	0.413	-	–	1.8
55	-	110	4.331	65.1	2.563	27	1.063	1.5	0.059	52.4	36.2	14.4	UCX11	UCX11L3		7.5	0.295	25.4	1	39.7	1.563	10.5	0.413	M10×1.25	–	1.8
-	2-7/16	120	4.724	65.1	2.563	28	1.102	1.5	0.059	57.2	40.1	14.2	UCX12-39	UCX12-39L3		7.5	0.295	25.4	1.000	39.7	1.563	12	0.472	-	1/2-20UNF	1.95
60	-	120	4.724	65.1	2.563	28	1.102	1.5	0.059	57.2	40.1	14.4	UCX12	UCX12L3		7.5	0.295	25.4	1	39.7	1.563	12	0.472	M12×1.5	–	2.05
-	2-1/2	125	4.921	74.6	2.937	30	1.181	1.5	0.059	62.2	44.1	14.5	UCX13-40	UCX13-40L3		9	0.354	30.2	1.189	44.4	1.748	12	0.472	-	1/2-20UNF	2.61
65	-	125	4.921	74.6	2.937	30	1.181	1.5	0.059	62.2	44.1	14.5	UCX13	UCX13-L3		9	0.354	30.2	1.189	44.4	1.748	12	0.472	M12X1.5	-	1.94
-	2-3/4	130	5.118	77.8	3.063	32	1.260	1.5	0.059	67.4	48.3	14.5	UCX14-44	UCX14-44L3		9	0.354	33.3	1.311	44.5	1.752	12	0.472	-	1/2-20UNF	2.75
70	-	130	5.118	77.8	3.063	32	1.260	1.5	0.059	67.4	48.3	14.5	UCX14	UCX14-L3		9	0.354	33.3	1.311	44.5	1.752	12	0.472	M12X1.5	-	2.74
-	3	140	5.512	82.6	3.252	33	1.299	1.5	0.059	72.7	53.0	14.6	UCX15-48	UXC15-48L3		9	0.354	33.3	1.311	49.3	1.941	14	0.551	-	1.2-20UNF	3.32
75	-	140	5.512	82.6	3.252	33	1.299	1.5	0.059	72.7	53.0	14.6	UCX15	UCX15-L3		9	0.354	33.3	1.311	49.3	1.941	14	0.551	M12X1.5	-	3.41
-	3 1/8	150	5.906	85.7	3.374	34	1.339	2	0.079	84.0	61.9	14.5	UCX16-50	-		10	0,394	34.1	1.343	51.6	2.031	14	0.551	-	-	3.87
80	-	150	5.906	85.7	3.374	35	1.378	2	0.079	84.0	61.9	14.5	UCX16	UCX16-L3		10	0,394	34.1	1.343	51.6	2.031	14	0.551	M12X1.5	-	3.87
-	3 1/4	160	6.299	96.012	3.78	37.998	1.496	2	0.079	96.1	71.5	14.5	UCX17-52	-		11	0.433	39.7	1.563	56.3	2.217	15	0.591	-	-	5.05
85	-	160	6.299	96	3.780	38	1.496	2	0.079	96.1	71.5	14.5	UCX17	UCX17-L3		11	0.433	39.7	1.563	56.3	2.217	15	0.591	M12X1.5	-	5.05
-	3 1/2	170	6.693	103.988	4.094	40	1.575	2	0.079	109	81.9	14.4	UCX18-56	-		11.5	0.453	42.9	1.689	61.1	2.406	16	0.630	-	-	6.00
90	-	170	6.693	104	4.094	40	1.575	2	0.079	109	81.9	14.4	UCX18	-		11.5	0.453	42.9	1.689	61.1	2.406	16	0.630	M14X1.5	-	6.00
-	4	190	7.480	117.5	4.626	43	1.693	2.1	0.083	133	105	14.4	UCX20-64	-		13	0.512	44	1.732	68	2.689	18	0.709	-	5/8-18UNF	8.56
100	-	190	7.480	117.5	4.626	43	1,683	2,1	0.083	133	105	14.4	UCX20	-		13	0.512	49.2	1.937	68.3	2.689	18	0.709	M16X1.5	-	8.56

* Not a stocked range although available on request.

Note: L3 = Triple Lip

Every effort has been taken to ensure that the data listed in this catalogue is correct.
Finer Power Transmissions P/L will not accept liability for any damage or loss caused as a result of the data in this catalogue.
Every effort has been taken to ensure that the data listed in this catalogue is correct.
Finer Power Transmissions P/L will not accept liability for any damage or loss caused as a result of the data in this catalogue.