POS Series (Metric Male)

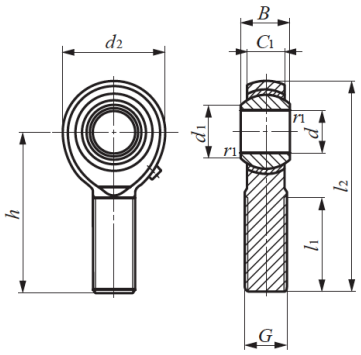

POS(···A)

Identification No.	Dimensions mm											Dynamic Load capacity	Static Load Capacity	Mass (Ref.)
	d	Thread G	d2	c1	B	d3	l2	h	l1	-1 r ls min	Ball dia. mm (inch)	Cd N	Cs N	g
POS 3 POS 3L	3	M 3x0.5	12	4.5	6	5.2	33	27	15	0.2	7.938 (5/16)	1 750	1 220	5.0
POS 4 POS 4L	4	M 4X0.7	14	5.3	7	6.5	37	30	17	0.2	9.525 (3/8)	2 480	2 060	8.1
POS 5 POS 5L	5	M 5X0.8	16	6	8	7.7	41	33	20	0.2	11.112 (7/16)	3 270	3 340	12.5
POS 6 POS 6L	6	M 6X1	18	6.75	9	9	45	36	22	0.2	12.700 (1/2)	4 200	4 730	19
POS 8 POS 8L	8	M8X1.25	22	9	12	10.4	53	42	25	0.2	15.875 (5/8)	7 010	8 640	32
POS 10 POS 10L	10	M 10X1.5	26	10.5	14	12.9	61	48	29	0.2	19.050 (3/4)	9 810	13 300	54
POS 12 POS12 L	12	M 12X1.75	30	12	16	15.4	69	54	33	0.2	22.225 (7/8)	13 100	16 900	85
POS 14 POS 14L	14	M 14X2	34	13.5	19	16.9	77	60	36	0.2	25.400 (1)	16 800	20 900	126
POS 16 POS16L	16	M 16X2	38	15	21	19.4	85	66	40	0.2	28.575 (1 1/8)	21 000	25 400	185
POS 18 POS 18L	18	M 18X1.5	42	16.5	23	21.9	93	72	44	0.2	31.750 260	25 700	30 200	260
POS 20 POS 20L	20	M 20X1.5	46	18	25	24.4	101	78	47	0.2	34.925 340	30 800	35 500	340
POS 22 POS 22L	22	M 22X1.5	50	20	28	25.8	109	84	51	0.2	38.100 435	37 400	41 700	435
POS 25 POS 25L	25	M 24X2	60	22	31	29.6	124	94	57	0.6	42.862 (1 11/16)	46 200	72 700	650

L = Left Hand Thread

Every effort has been taken to ensure that the data listed in this catalogue is correct.
Finer Power Transmissions P/L will not accept liability for any damage or loss caused as a result of the data in this catalogue.