SDTZ Ball Studs is an "L" shaped shank with a male left hand thread made up of zinc base alloy and steel.

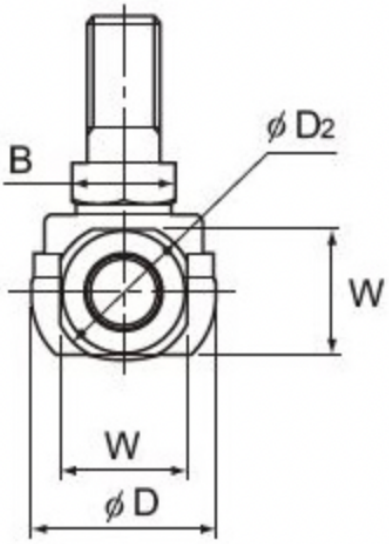

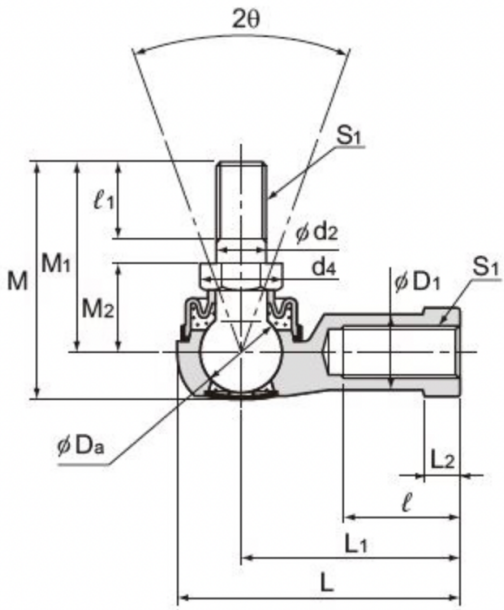

BLD Series

Bearing Number	Dimensions (mm)																	Max Tilt Angle	Applied Static Load Cs (N)	Weight (g)
	L	D	M	Thread Size	l	L1	L2	D1	D2	W	d2	M1	M2	l1	B	d4	Ball Dia			
BL5D	34.5	15	26.7	M5*0.8	27	15	4	9	12	10	5	21	10	8	8	9.2	9.525	40	6470	12
BL6D	38	16	62.6	M6*1	30	16	5	10	13	11	6	26	11	11	10	11.6	11.112	40	9900	26
BL8D	45.5	19	38.6	M8*1.25	36	19	6	12.5	16	14	8	31	14	12	12	13.8	12.7	40	12500	49
BL10D	55.5	25	46.3	M10*1.25	43	23	7	14.5	19	17	10	37	17	15	14	16.2	15.875	40	18300	87
BL12D	64.5	29	52.7	M12*1.25	50	26	8	17.5	22	19	12	42	19	17	17	19.6	19.05	40	26700	143
BL14D	74	34	68.4	M14*1.5	57	30	10	20	25	22	14	56	21.5	22	19	21.9	22.225	40	36400	235

Also Stock - SQ8 - Ball Stud Metric Male 8mm Bore Type 2

BL BD Series

Bearing Number	Dimensions (mm)																	Max Tilt Angle	Applied Static Load Cs (N)	Weight (g)
	L	D	M	Thread Size	l	L1	L2	D1	D2	W	d2	M1	M2	l1	B	d4	Ball Dia			
BL6BD	38	16	62.6	M6*1.25	30	16	5	10	13	11	6	26	11	11	10	11.6	11.112	40	9900	12
BL8BD	45.5	19	38.6	M8*1.5	36	19	6	12.5	16	14	8	31	14	12	12	13.8	12.7	40	12500	49
BL10BD	55.5	25	52.3	M10*1.5	43	23	7	14.5	19	17	10	43	17	21	14	16.2	15.875	40	18300	90
BL12BD	64.5	29	59.7	M12*1.75	50	26	8	17.5	22	19	12	49	19	24	17	19.6	19.05	40	26700	148

Every effort has been taken to ensure that the data listed in this catalogue is correct.
Finer Power Transmissions P/L will not accept liability for any damage or loss caused as a result of the data in this catalogue.

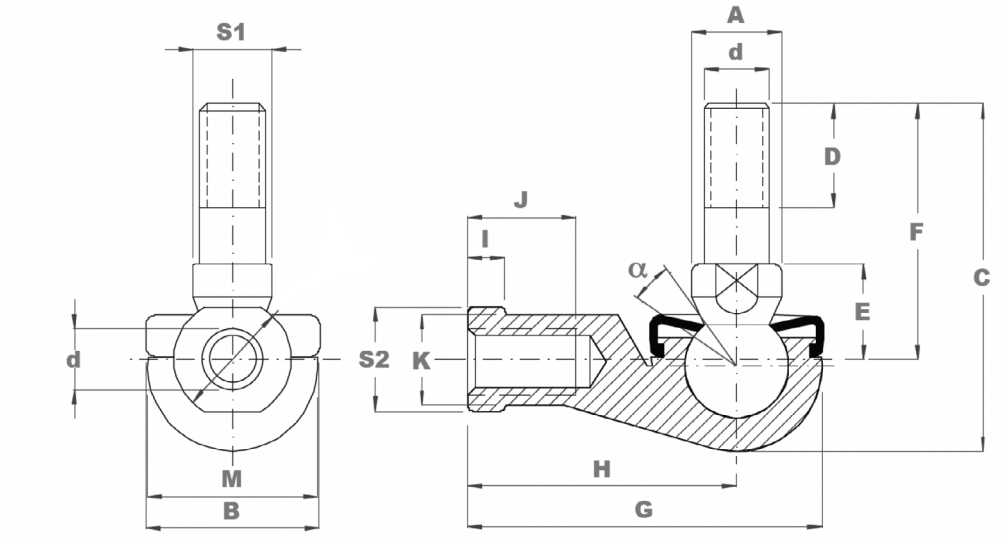

SQY Series

PART NO	Dimensions (inch/mm)															deg	Laod kN Stat	Wgt g
	G UNF	A	B	C	D	E	F	G	H	I	J	K	M	S1	S2			
SQY3/16RS	10-32	9	19	29	8	10	21	35	27	4	14	9	16	7	9	25	2	26
SQY1/4-RS	1/4-28	10	20	35.5	11	11	26	40	30	5	14	10	19	8	11	25	4	39
SQY5/16-RS	5/16-24	12	24	42.5	12	14	31	48	36	5	17	12.5	23	10	14	25	7	68
SQY3/8-RS	3/8-24	14	30	50.5	15	17	37	57	43	7	21	15	27	11	17	25	10	112
SQY7/16-RS	7/16-20	17	32	57.5	17	19	42	66	50	7	25	17.5	31	15	19	25	16	164
SQY1/2-RS	1/2-20	19	38	73.5	22	21.5	56	75	57	8	26	20	35	17	22	25	19	254
SQY5/8-RS	5/8-18	22	44	79.5	23	23.5	60	84	64	8	32	22	39	19	22	20	26	336
SQY3/4-RS	3/4-12	23	45	90	25	26.5	68	93	71	10	34	25	44	20	27	20	33	464
THE FULL RANGE IS AVAILABLE IN LEFT HAND THREAD USE PART NO SQYL-RS. (NOT CURRENTLY STOCKED)																		

Every effort has been taken to ensure that the data listed in this catalogue is correct.
Finer Power Transmissions P/L will not accept liability for any damage or loss caused as a result of the data in this catalogue.