SDTZ Spherical Plain Bearings are manufactured with a single split in the outer ring in the axial direction.
Both the inner and outer are phosphate treated. Sliding surfaces are steel.

The ES type contains lubrication grooves and holes in the outer and inner rings.

The 2RS type is fitted with seal rings on each side.

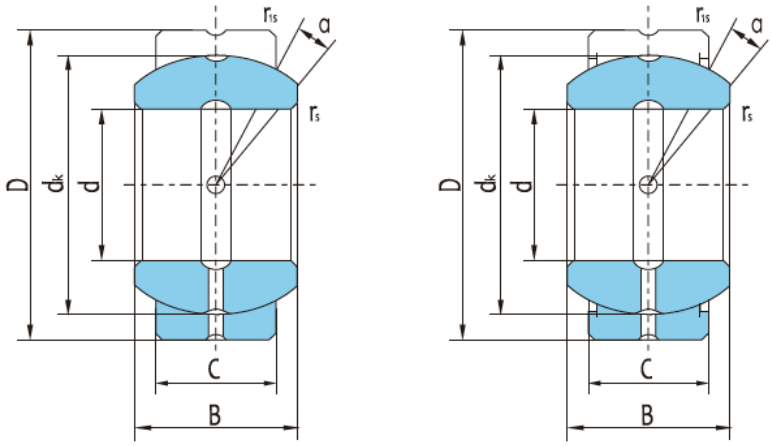

GEZ...ES GEZ...ES-2RS

GEZ Series (Imperial)

Bearing number		Dimensions (mm/inch)								Load ratings (KN)		Weight (kg)
		d	D	B	C	dk	rs min	r1s min	a° ≈	Dynamic	Static	
GEZ12ES	-	12.7	22.225	11.1	9.525	18	0.15	0.6	6	13	41	0.022
		0.5	0.875	0.437	0.375	0.709	0.006	0.024				
GEZ15ES	-	15.875	26.988	13.894	11.913	23	0.15	0.6	6	22	65	0.036
		0.625	1.0625	0.547	0.469	0.906	0.006	0.024				
GEZ19ES	-	19.05	31.75	16.662	14.275	27.5	0.3	0.6	6	31	95	0.053
		0.75	1.25	0.656	0.562	1.083	0.012	0.024				
GEZ22ES	-	22.225	36.513	19.431	16.662	32	0.3	0.6	6	42	127	0.085
		0.875	1.4375	0.756	0.656	1.26	0.012	0.024				
-	GEZ25ES-2RS	25.4	41.275	22.225	19.05	36.5	0.3	0.6	6	56	166	0.121
		1	1.625	0.875	0.75	1.437	0.012	0.024				
-	GEZ31ES-2RS	31.75	50.8	27.762	23.8	45.5	0.6	0.6	6	86	260	0.23
		1.25	2	1.093	0.937	1.791	0.024	0.024				
-	GEZ34ES-2RS	34.925	55.563	30.15	26.187	49	0.6	1	5	102	310	0.35
		1.375	2.1875	1.187	1.031	1.929	0.024	0.04				
-	GEZ38ES-2RS	38.1	61.913	33.325	28.575	54.7	0.6	1	6	125	375	0.42
		1.5	2.4375	1.312	1.125	2.154	0.024	0.04				
-	GEZ44ES-2RS	44.45	71.438	38.887	33.325	63.9	0.6	1	6	170	510	0.64
		1.75	2.8125	1.531	1.312	2.516	0.024	0.04				
-	GEZ50ES-2RS	50.8	80.963	44.45	38.1	73	0.6	1	6	224	670	0.93
		2	3.1875	1.75	1.5	2.874	0.024	0.04				
-	GEZ57ES-2RS	57.15	90.488	50.013	42.85	82	0.6	1	6	280	850	1.3
		2.25	3.5625	1.969	1.687	3.228	0.024	0.04				
-	GEZ63ES-2RS	63.5	100.013	55.55	47.625	92	1	1	6	355	1060	1.85
		2.5	3.9375	2.187	1.875	3.622	0.04	0.04				
-	GEZ76ES-2RS	76.2	120.65	66.675	57.15	109.5	1	1	6	500	1500	3.1
		3	4.750	2.625	2.250	4.312	0.04	0.04				
	GEZ101ES-2RS	101.6	158.75	88.9	76.2	146	1	1	6	900	2650	7
		4	6.25	3.5	3	5.748	0.04	0.04				

Every effort has been taken to ensure that the data listed in this catalogue is correct.
Finer Power Transmissions P/L will not accept liability for any damage or loss caused as a result of the data in this catalogue.