Rod Ends
with Female Thread

SDTZ Rod Ends are manufactured with a bronze liner on the spherical surface of the outer ring and a chromium liner on the surface of the inner ring.

The surface of the rod body is zinc plated and the housing contains a lubrication hole/grease nipple

Sliding surfaces are bronze and steel.

All rod ends are available in either left or right hand thread (Add the suffix "L" for left hand thread).

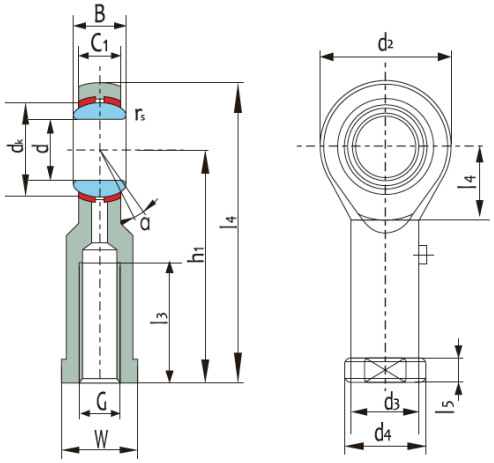

PHS Series (Metric Female)

Bearing Number	Dimensions (mm/inch)													Load ratings (KN)		Weight (kg)
	d	B	dk	C1	d2	G	h1	L3	L4	W	d3	d4	a° ≈	Dynamic	Static	
PHS-3	3	6	7.93	4.5	14	M3*0.5	21	10	28	7	6.8	8.5	14	1.8	3.7	0.008
PHS-4	4	7	9.53	5.3	16	M4*0.7	24	10	32	8	7.8	9.5	13	2.5	4.6	0.013
PHS-5	5	8	11.11	6	16	M5*0.8	27	10	35	9	8.5	11	13	3.3	5.7	0.016
PHS-6	6	9	12.70	6.75	18	M6*10	30	12	39	11	10.0	13	13	4.3	7.2	0.022
PHS-8	8	12	15.88	9	22	M8*1.25	36	16	47	14	12.5	16	14	7.2	11.6	0.047
PHS-10	10	14	19.05	10.5	26	M10*1.5	43	20	56	17	15.0	19	13	10	14.5	0.077
PHS-10X1.25	10	14	19.05	10.5	26	M10*1.25	43	20	56	17	15.0	19	13	10	14.5	0.077
PHS12	12	16	22.23	12	30	M12*1.75	50	22	65	19	17.5	22	13	13.4	17	0.10
PHS12X1.25	12	16	22.23	12	30	M12*1.25	50	22	65	19	17.5	22	13	13.4	17	0.10
PHS-14	14	19	25.40	13.5	34	M14*2.0	57	25	74	22	20.0	25	16	17	24	0.16
PHS-16	16	21	28.58	15	40	M16*2.0	64	28	84	24	22.0	27	15	21.6	28.5	0.22
PHS-16X1.5	16	21	28.58	15	40	M16*1.5	64	28	84	24	22.0	27	15	21.6	28.5	0.22
PHS-18	18	23	31.75	16.5	44	M18*1.5	71	32	93	27	25.0	31	15	26	42.5	0.32
PHS-20	20	25	34.93	18	50	M20*1.5	77	33	102	30	27.5	34	14	31.5	42.5	0.42
PHS-22	22	28	38.10	20	54	M22*1.5	84	37	111	32	30.0	38	15	38	57	0.54
PHS-25	25	31	42.85	22	60	M24*2.0	94	42	124	36	33.5	42	15	47.5	68	0.73

Every effort has been taken to ensure that the data listed in this catalogue is correct.
Finer Power Transmissions P/L will not accept liability for any damage or loss caused as a result of the data in this catalogue.