SDTZ "SIR" series Rod Ends are manufactured with a stretching rod, lubrication hole and grease nipple and fitted with GE-ES Spherical Plain Bearings.

Sliding surfaces are steel and steel.

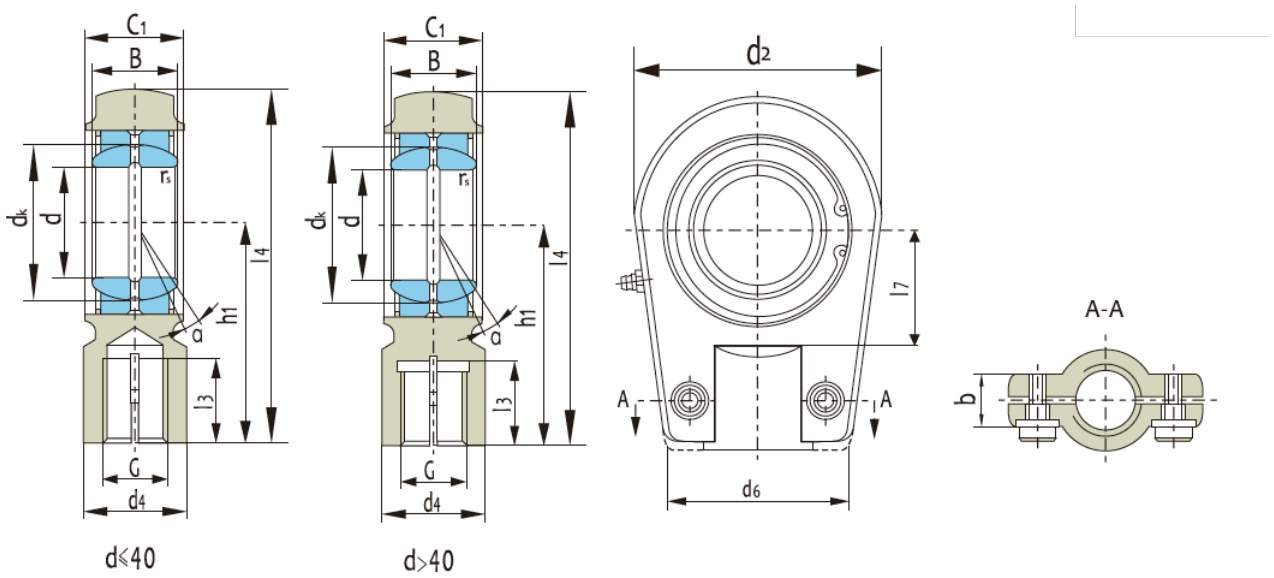

SIR Series (Female Clamped)

Bearing Number	Dimensions (mm)														Load Ratings (KN)		Weight (kg)
	d	B	dK	C1 Max	d2 Max	G	h1	l3 Min	l4	l7	d4	d6	b	a° ≈	Dynamic	Static	
SIR20ES	20	16	29	19	56	M16*1.5	50	17	80	25	25	46	17	9	30	72	0.44
SIR25ES	25	20	35.5	23	56	M16*1.5	50	17	80	25	28	46	21	7	48	72	0.47
SIR30ES	30	22	40.7	28	64	M22*1.5	60	23	94	30	30	50	26	6	62	106	0.74
SIR35ES	35	25	47	30	48	M28*1.5	70	29	112	38	40	66	28	6	80	153	1.24
SIR40ES	40	28	53	35	94	M35*1.5	85	36	135	45	49	76	33	7	100	250	2
SIR50ES	50	35	66	40	116	M45*1.5	105	46	168	55	61	90	37	6	156	365	3.8
SIR60ES	60	44	80	50	130	M58*1.5	130	59	200	65	75	120	46	6	246	400	5.4
SIR70ES	70	49	92	55	154	M65*1.5	150	66	237	75	86	130	51	6	315	450	8.5
SIR80ES	80	55	105	60	176	M80*2	170	81	265	80	105	160	55	6	400	670	12
SIR90ES	90	60	115	65	206	M100*2	210	101	323	90	124	180	60	5	490	980	21.5

Every effort has been taken to ensure that the data listed in this catalogue is correct.
Finer Power Transmissions P/L will not accept liability for any damage or loss caused as a result of the data in this catalogue.