SDTZ "SK" series Rod Ends are manufactured with a weldable steel stretching rod with a welding slope and dowel pin, fitted with GE-ES Spherical Plain Bearings.

Sliding surfaces are steel and steel.

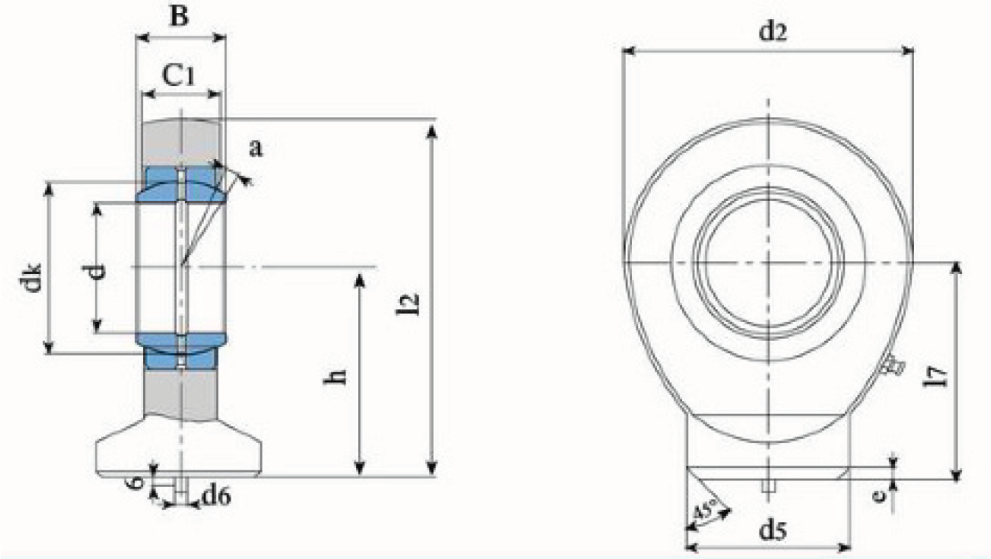

SK Series (Weld-on with Dowel Pin)

Bearing Number	Dimensions (mm)											Load ratings (KN)		Weight (kg)
	d	B	C1 Max	d2	h	l2	l7	d5	d6	e	a° ≈	Dynamic	Static	
SK15ES	15	12	10	40	31	51	20	21	4	2.5	8	16	24	0.12
SK17ES	17	14	11	46	35	58	23	24	4	2.5	10	21	31	0.19
SK20ES	20	16	13	53	38	64.5	27.5	27.5	4	2.5	9	30	42	0.23
SK25ES	25	20	17	64	45	77	33	33.5	4	3	7	48	66	0.43
SK30ES	30	22	19	73	51	87.5	37.5	40	4	3	6	62	87	0.64
SK35ES	35	25	21	82	61	102	43	47	4	3	6	79	99	0.96
SK40ES	40	28	23	92	69	115	48	52	4	4	7	99	122	1.3
SK45ES	45	32	27	102	77	128	52	58	6	5	7	127	160	1.8
SK50ES	50	35	30	112	88	144	59	62	6	5	6	156	193	2.5
SK60ES	60	44	38	135	100	167.5	72.5	70	6	5	6	245	294	3.9
SK70ES	70	49	42	160	115	195	86	80	6	6	6	313	406	6.6
SK80ES	80	55	47	180	141	231	98	95	6	6	6	400	494	8.7

No relubrication facility.

Can only be relubricated through the rod end housing.

Every effort has been taken to ensure that the data listed in this catalogue is correct.
Finer Power Transmissions P/L will not accept liability for any damage or loss caused as a result of the data in this catalogue.