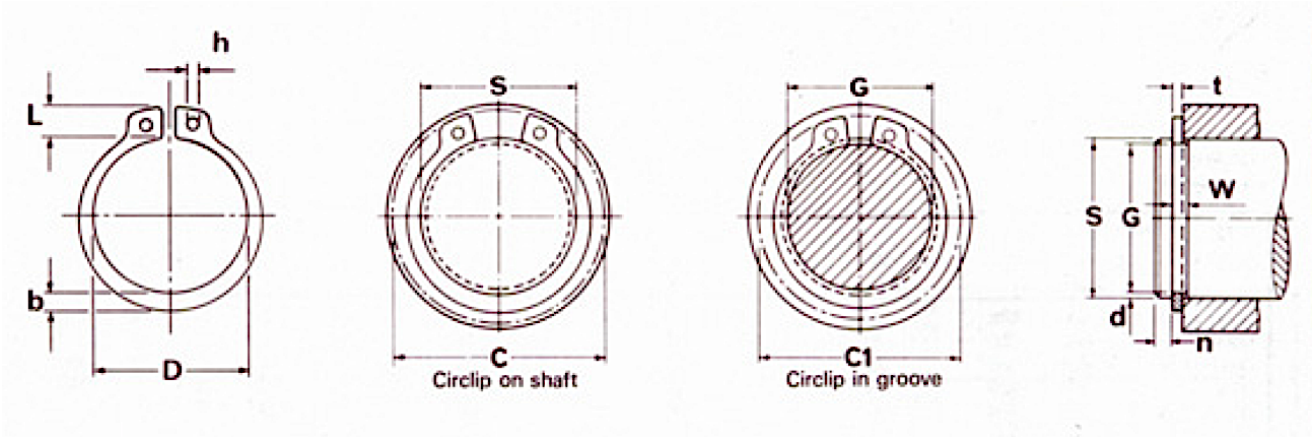

Circlips - Heavy Duty																			
SIZE CODE	SHAFT	GROOVE (G)						CIRCLIP (F)									Wt (kg/k)	Tc (N)	Tg (N)
	S	G	Tol.	W	Tol.	n	d	t	Tol.	D	Tol.	C	C1	L	b	h			
1460-12	12	11.5	+0.00 -0.01	1.6	+0.14 -0.00	0.7	0.25	1.5	+0.00 -0.06	11	+0.10 -0.36	19.3	8.3	3.4	1.8	1.7	0.75	17500	1130
1460-15	15	14.3		1.6		1.1	0.35	1.5		13.8		25.1	3.9	4.8	2	2	1.1	21900	2260
1460-18	18	17		1.6		1.5	0.5	1.5		16.5		28.7	27.2	5.1	2.7	2	1.56	26300	4070
1460-20	20	19	+0.00 -0.13	1.85		1.5	0.5	1.75		18.5		31.5	30	5.5	3	2	2.19	34100	4150
1460-25	25	23.9	+0.00 -0.21	2.15		1.7	0.55	2	+0.00 -0.07	23.2	+0.13 -0.42	38.3	36.7	6.4	3.4	2	3.59	48700	6130
1460-28	28	26.6		2.15		2.1	0.7	2		25.9		41.5	39.6	6.5	3.5	2	4.25	54500	8440
1460-30	30	28.6		2.15		2.1	0.7	2		27.9		43.5	41.6	6.5	4.1	2	5.35	58400	9610
1460-32	32	30.3	+0.00 -0.25	2.15		2.6	0.85	2		29.6		45.5	43.3	6.5	4.1	2.5	5.85	62300	10200
1460-35	35	33		2.65		3	1	2.5		32.2	+0.25 -0.50	48.9	46.4	6.7	4.2	2.5	7.2	85200	13200
1460-38	38	36		2.65		3	1	2.5		35.2		52.1	49.6	6.8	4.3	2.5	8.3	92500	15800
1460-40	40	37.5		2.65		3.8	1.25	2.5		36.5	+0.39 -0.90	55	51.5	7	4.4	2.5	8.6	80900	18800
1460-42	42	39.5		2.65		3.8	1.25	2.5		38.5		57.4	53.9	7.2	4.5	2.5	9.3	84900	19800
1460-45	45	42.5		2.65		3.8	1.25	2.5		41.5		61	57.5	7.5	4.7	2.5	10.7	91000	21200
1460-48	48	45.5		2.65		3.8	1.25	2.5		4.5		64.6	61.1	7.8	5	2.5	11.3	97100	22600
1460-50	50	47		3.15		4.5	1.5	3	+0.00 -0.08	45.8		67	63	8	5.1	2.5	15.3	121000	28300
1460-55	55	52		3.15		4.5	1.5	3		50.8		73	69	8.5	5.4	2.5	17.1	133000	31100
1460-58	58	55		3.15		4.5	1.5	3		53.8		76.6	72.6	8.8	5.6	2.5	18.9	141000	32800
1460-60	60	57		3.15		4.5	1.5	3		55.8		79	75	9	5.8	2.5	19.4	146000	33900
1460-65	65	62	+0.00 -0.30	4.15		4.5	1.5	4	+0.00 -0.10	60.8	+0.46 -1.10	84.6	80.6	9.3	6.3	3	29.1	210000	36800
1460-70	70	67		4.15		4.5	1.5	4		65.5		90	86	9.5	6.6	3	35.3	226000	39600
1460-75	75	72		4.15		4.5	1.5	4		70.5		95.4	91.4	9.7	7	3	39.3	243000	424000
1460-80	80	76.5		4.15		5.3	1.75	4		74.5		100.6	96.1	9.8	7.4	3	43.7	259000	52800
1460-85	85	81.5	+0.00 -0.35	4.15		5.3	1.75	4		79.5		106	101.5	10	7.8	3.5	48.5	275000	56100
1460-90	90	86.5		4.15		5.3	1.75	4		84.5	+0.54 -1.30	111.4	106.9	10.2	8.2	3.5	59.4	291000	59400
1460-95	95	91.5		4.15		5.3	1.75	4		89.5		116.6	112.1	10.3	8.6	3.5	61.2	307000	62700
1460-100	100	96.5		4.15		5.3	1.75	4		94.5		122	117.5	10.5	9	3.5	71.6	324000	66000

Every effort has been taken to ensure that the data listed in this catalogue is correct.
Finer Power Transmissions P/L will not accept liability for any damage or loss caused as a result of the data in this catalogue.