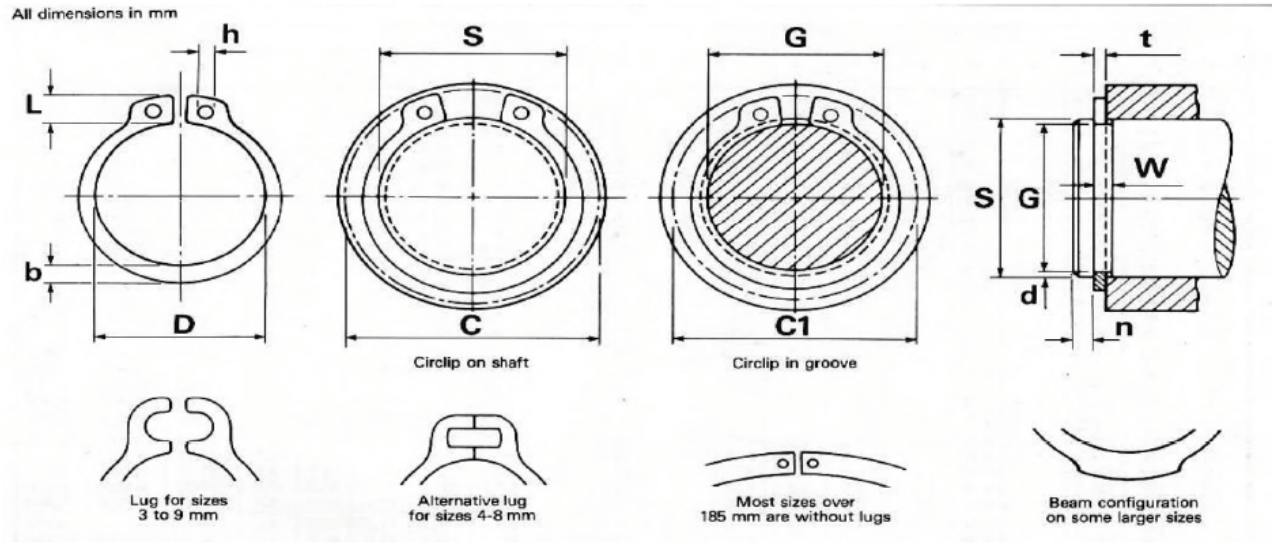

Stainless Steel Circlips - External																
SIZE CODE	SHAFT	GROOVE (G)						CIRCLIP (F)								
	S	G	Tol.	W	Tol.	n (min.)	d~	t	Tol.	D	Tol.	C	C1	L (max)	b~	h (min)
1400-4	4	3.8	(+) 0.00 (-) 0.048	0.5		0.3	0.1	0.4	(+)0.00 (-)0.05-	3.7	(+)0.04 (-) 0.15	8.6	8.2	2.2	0.9	1
1400-5	5	4.8		0.7		0.3	0.1	0.6		4.7		10.3	9.8	2.5	1.1	1
1400-6	6	5.7		0.8		0.5	0.15	0.7		5.6		11.7	11.1	2.7	1.3	1.2
1400-7	7	6.7	(+) 0.00 (-) 0.06	0.9		0.5	0.15	0.8		6.5	(+)0.06 (-) 0.18	13.5	12.9	3.1	1.4	1.2
1400-8	8	7.6		0.9		0.6	0.2	0.8		7.4		14.7	14	3.2	1.5	1.2
1400-9	9	8.6		1.1		0.6	0.2	1		8.4		16	15.2	3.3	1.7	1.2
1400-10	10	9.6		1.1		0.6	0.2	1		9.3		17	16.2	3.3	1.8	1.5
1400-11	11	10.5	(+)0.00 (-)0.11	1.1		0.8	0.25	1		10.2	(+)0.10 (-)0.36	18	17.1	3.3	1.8	1.5
1400-12	12	11.5		1.1		0.8	0.25	1		11		19	18.1	3.3	1.8	1.7
1400-13	13	12.4		1.1		0.9	0.3	1		11.9		20.2	19.2	3.4	2	1.7
1400-14	14	13.4		1.1		0.9	0.3	1		12.9		21.4	20.4	3.5	2.1	1.7
1400-15	15	14.3		1.1		1.1	0.35	1		13.8		22.5	21.5	3.6	2.2	1.7
1400-16	16	15.2		1.1	-	1.2	0.4	1		14.7		23.8	22.6	3.7	2.2	1.7
1400-17	17	16.2		1.1		1.2	0.4	1		15.7		25	23.8	3.8	2.3	1.7
1400-18	18	17		1.3		1.5	0.5	1.2	(+)0.00 (-)0.06	16.5		26.2	24.8	3.9	2.4	2
1400-19	19	18		1.3		1.5	0.5	1.2		17.5		27.2	25.8	3.9	2.5	2
1400-20	20	19	(+)0.00 (-)0.13	1.3		1.5	0.5	1.2		18.5	(+)0.13 (-)0.42	28.4	27	4	2.6	2
1400-21	21	20		1.3		1.5	0.5	1.2		19.5		29.6	28.2	4.1	2.7	2
1400-22	22	21		1.3		1.5	0.5	1.2		20.5		30.8	29.4	4.2	2.8	2
1400-23	23	22		1.3		1.5	0.5	1.2		21.5		32	30.6	4.3	2.9	2
1400-24	24	22.9	(+)0.00 (-)0.21	1.3		1.7	0.55	1.2		22.2	(+)0.21 (-)0.42	33.2	31.7	4.4	3	2
1400-25	25	23.9		1.3		1.7	0.55	1.2		23.2		34.2	32.7	4.4	3	2
1400-26	26	24.9		1.3		1.7	0.55	1.2		24.2		35.5	33.9	4.5	3.1	2
1400-27	27	25.6		1.3		2.1	0.7	1.2		24.9		36.7	34.8	4.6	3.1	2
1400-28	28	26.6		1.6		2.1	0.7	1.5		25.9		37.9	36	4.7	3.2	2

Every effort has been taken to ensure that the data listed in this catalogue is correct.
Finer Power Transmissions P/L will not accept liability for any damage or loss caused as a result of the data in this catalogue.

Stainless Steel Circlips - External																
SIZE CODE	SHAFT	GROOVE (G)						CIRCLIP (F)								
	S	G	Tol.	W	Tol.	n (min.)	d~	t	Tol.	D	Tol.	C	C1	L (max)	b~	h (min)
1400-29	29	27.6	(+)0.00 (-)0.21	1.6		2.1	0.7	1.5		26.9		39.1	37.2	4.8	3.4	2
1400-30	30	28.6		1.6		2.1	0.7	1.5		27.9	(+)0.21 (-)0.42	40.5	38.6	5	3.5	2
1400-32	32	30.3		1.6		2.6	0.85	1.5		29.6		43	40.7	5.2	3.6	2.5
1400-33	33	31.3		1.6		2.6	0.85	1.5		30.5		44	41.7	5.2	3.7	2.5
1400-35	35	33		1.6		3	1	1.5		32.2		46.8	44.2	5.6	3.9	2.5
1400-36	36	34		1.85		3	1	1.75		33.2	(+)0.25 (-)0.5	47.8	45.2	5.6	4	2.5
1400-37	37	35		1.85		3	1	1.75	(+)0.00 (-)0.06	34.2		49	47	5.7	4.1	2.5
1400-38	38	36		1.85		3	1	1.75		35.2		50.2	47.6	5.8	4.2	2.5
1400-40	40	37.5	(+)0.00 (-)0.25	1.85		3.8	1.25	1.75		36.5		52.6	49.5	6	4.4	2.5
1400-41	41	38.5		1.85		3.8	1.25	1.75		37.5		54	51.5	6.2	4.5	2.5
1400-42	42	39.5		1.85		3.8	1.25	1.75		38.5		55.7	52.5	6.5	4.5	2.5
1400-45	45	42.5		1.85		3.8	1.25	1.75		41.5	(+)0.39 (-)0.90	59.1	55.9	6.7	4.7	2.5
1400-47	47	44.5		1.85		3.8	1.25	1.75		43.5		61.3	58.1	6.8	4.9	2.5
1400-48	48	45.5		1.85		3.8	1.25	1.75		44.5		62.5	59.3	6.9	5	2.5
1400-50	50	47		2.15		4.5	1.5	2		45.8		64.5	60.8	6.9	5.1	2.5
1400-52	52	49		2.15	(+)0.14 (-)0.00	4.5	1.5	2		47.8		66.7	63	7	5.2	2.5
1400-55	55	52		2.15		4.5	1.5	2		50.8		70.2	66.4	7.2	5.4	2.5
1400-56	56	53		2.15		4.5	1.5	2		51.8		71.6	67.6	7.3	5.5	2.5
1400-57	57	-		-		-	-	-		-		-	-	-	-	-
1400-58	58	55		2.15		4.5	1.5	2		53.8		73.6	68.6	7.3	5.5	2.5
1400-60	60	75		2.15		4.5	1.5	2		55.8		75.6	71.8	7.4	5.8	2.5
1400-61	61	-		2.15		-	-	-		-		-	-	-	-	-
1400-62	62	59		2.15		4.5	1.5	2	(+)0.00 (-)0.07	57.8		77.8	74	7.5	6.0	2.5
1400-63	63	60	(+)0.00 (-)0.30	2.15		4.5	1.5	2		58.8		79.0	75.2	7.6	6.2	2.5
1400-64	64	-		-		-	-	-		-	(+)0.46 (-)1.10	-	-	-	-	-
1400-65	65	62		2.65		4.5	1.5	2.5		60.8		81.4	77.6	7.8	6.3	3.0
1400-67	67	64		2.65		4.5	1.5	2.5		62.5		83.6	79.8	7.9	6.4	3.0
1400-68	68	65		2.65		4.5	1.5	2.5		63.5		84.4	81.0	8.0	6.5	3.0
1400-70	70	67		2.65		4.5	1.5	2.5		65.5		87.0	83.2	8.1	6.6	3.0
1400-72	72	69		2.65		4.5	1.5	2.5		67.5		89.2	85.4	82.0	6.8	3.0
1400-75	75	72		2.65		4.5	1.5	2.5		70.5		92.7	88.8	8.4	7.0	3.0
1400-80	80	76		2.65		5.3	1.75	2.5		74.5		98.1	93.7	8.6	7.4	3.0
1400-85	85	81.5		3.15		5.3	1.75	3		79.5		103.3	98.9	8.7	7.8	3.5
1400-90	90	86.5		3.15		5.3	1.75	3		84.5		108.5	104.0	8.8	8.2	3.5
1400-95	95	91.5	(+)0.00 (-)0.35	3.15	(+)0.18 (-)0.00	5.3	1.75	3	(+)0.00 (-)0.08	89.5	(+)0.54 (-)1.13	114.8	111.0	9.4	8.6	3.5
1400-100	100	96.5		3.15		5.3	1.75	3		94.5		120.2	116.0	9.6	9.0	3.5

Every effort has been taken to ensure that the data listed in this catalogue is correct.
Finer Power Transmissions P/L will not accept liability for any damage or loss caused as a result of the data in this catalogue.