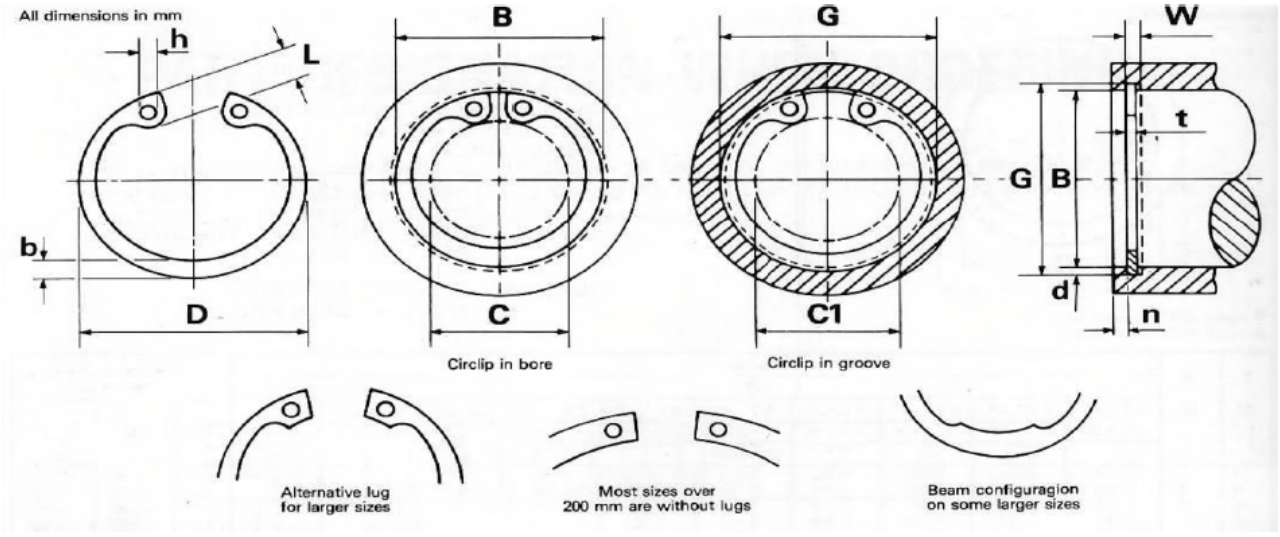

Stainless Steel Circlips - Internal																
SIZE CODE	BORE	GROOVE (G)						CIRCLIP (F)								
	B	G	Tol.	W	Tol.	n (min.)	d~	t	Tol.	D	Tol.	C	C1	L (max)	b~	h (min)
1300-10	10	10.4	(+)0.11 (-)0.00	1.1	(+)0.14 (-)0.00	0.6	0.2	1	-	10.8	-	3.3	4	3.2	1.4	1.2
1300-11	11	11.4		1.1		0.6	0.2	1	-	11.8		4.1	4.8	3.3	1.5	1.2
1300-12	12	12.5		1.1		0.8	0.25	1	-	13		4.9	5.7	3.4	1.7	1.5
1300-13	13	13.6		1.1		0.9	0.3	1	-	14.1		5.4	6.4	3.6	1.8	1.5
1300-14	14	14.6		1.1		0.9	0.3	1	-	15.1		6.2	7.2	3.7	1.9	1.7
1300-15	15	15.7		1.1		1.1	0.35	1	-	16.2		7.2	8.3	3.7	2	1.7
1300-16	16	16.8		1.1		1.2	0.4	1	-	17.3		8	9.2	3.8	2	1.7
1300-17	17	17.8		1.1		1.2	0.4	1	-	18.3		8.8	10	3.9	2.1	1.7
1300-18	18	19	(+)0.13 (-)0.00	1.1		1.5	0.5	1	-	19.5		9.4	10.8	4.1	2.2	2
1300-19	19	20		1.1		1.5	0.5	1	-	20.5	(+)0.42 (-)0.13	10.4	11.8	4.1	2.2	2
1300-20	20	21		1.1		1.5	0.5	1	-	21.5		11.2	12.6	4.2	2.3	2
1300-21	21	22		1.1		1.5	0.5	1	-	22.5		12.2	13.6	4.2	2.4	2
1300-22	22	23		1.1		1.5	0.5	1	-	23.5		13.2	14.6	4.2	2.5	2
1300-24	24	25.2	(+)0.21 (-)0.00	1.3		1.8	0.6	1.2	-	25.9		14.8	16.4	4.4	2.6	2
1300-25	25	26.2		1.3		1.8	0.6	1.2	-	26.9		15.5	17.2	4.5	2.7	2
1300-26	26	27.2		1.3		1.8	0.6	1.2	-	27.9		16.1	17.8	4.7	2.8	2
1300-27	27	28.4		1.3		2.1	0.7	1.2	-	29.1	(+)0.42 (-)0.21	17.1	19	4.7	2.9	2
1300-28	28	29.4		1.3		2.1	0.7	1.2	-	30.1		17.9	19.8	4.8	2.9	2
1300-29	29	30.4	(+)0.25 (-)0.00	1.3		2.1	0.7	1.2	-	31.1		18.9	20.8	4.8	3	2
1300-30	30	31.4		1.3		2.1	0.7	1.2	-	32.1		19.9	21.8	4.8	3	2
1300-32	32	33.7		1.3		2.6	0.85	1.2	-	34.4		20.6	22.9	5.4	3.2	2.5

Every effort has been taken to ensure that the data listed in this catalogue is correct.
Finer Power Transmissions P/L will not accept liability for any damage or loss caused as a result of the data in this catalogue.

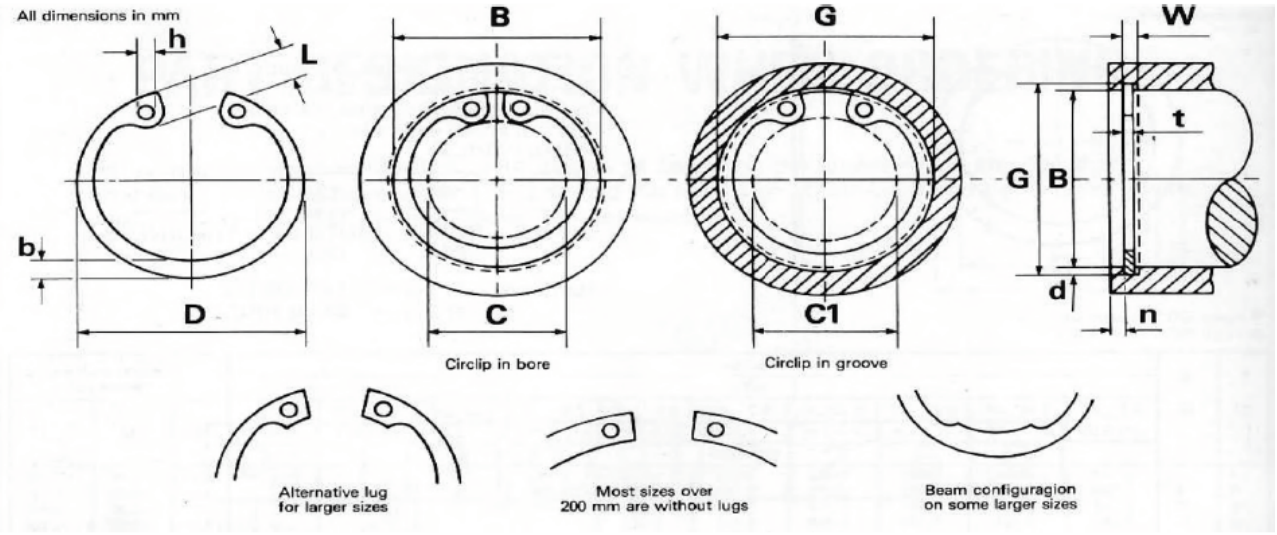

Stainless Steel Circlips - Internal																
SIZE CODE	BORE	GROOVE (G)						CIRCLIP (F)								
	B	G	Tol.	W	Tol.	n (min.)	d~	t	Tol.	D	Tol.	C	C1	L (max)	b~	h (min)
1300-34	34	35.7		1.6		2.6	0.85	1.5		36.5		22.6	24.9	5.4	3.3	2.5
1300-35	35	37		1.6		3	1	1.5		37.8		23.6	26.2	5.4	3.4	2.5
1300-36	36	38		1.6		3	1	1.5		38.8	(+)0.50 (-)0.25	24.6	27.2	5.4	3.5	2.5
1300-37	37	39		1.6		3	1	1.5		39.8		25.4	28	5.5	3.6	2.5
1300-38	38	40	(+)0.25 (-)0.00	1.6		3	1	1.5	(+)0.00 (-)0.06	40.8		26.4	29	5.5	3.7	2.5
1300-39	39	41		1.6		3	1	1.5		42		27.3	29.8	5.6	3.8	2.5
1300-40	40	42.5		1.85		3.8	1.25	1.75		43.5	(+)0.90 (-)0.39	27.8	30.9	5.8	3.9	2.5
1300-42	42	44.5		1.85		3.8	1.25	1.75		45.5		29.6	32.7	5.9	4.1	2.5
1300-45	45	47.5		1.85		3.8	1.25	1.75		48.5		32	35.1	6.5	4.3	2.5
1300-47	47	49.5		1.85		3.8	1.25	1.75		50.5		33.5	36.7	6.4	4.4	2.5
1300-50	50	53		2.15		4.5	1.5	2		54.2		36.3	40	6.5	4.6	2.5
1300-51	51	54		2.15		4.5	1.5	2		55.2		37.3	41	6.5	4.7	2.5
1300-52	52	55		2.15	(+)0.14 (-)0.00	4.5	1.5	2		56.2		37.9	41.6	6.7	4.7	2.5
1300-55	55	58		2.15		4.5	1.5	2		59.2		40.7	44.4	6.8	5	2.5
1300-56	56	59		2.15		4.5	1.5	2		60.2		41.7	45.4	6.8	5.1	2.5
1300-57	57	60		2.15		4.5	1.5	2		62.2		42.7	46.4	6.8	5.1	2.5
1300-58	58	61		2.15		4.5	1.5	2		62.2		43.5	47.2	6.9	5.2	2.5
1300-59	59	-	(+)0.30 (-)0.00	-		-	-	-	(+)0.00 (-)0.07	-	(+)1.10 (-)0.46	-	-	-	-	-
1300-60	60	63		2.15		4.5	1.5	2		64.2		44.7	48.4	7.3	5.4	2.5
1300-61	61	-		2.15		-	-	-		-		-	-	-	-	-
1300-62	62	65		2.15		4.5	1.5	2		66.2		46.7	50.4	7.3	5.5	2.5
1300-63	63	66		2.15		4.5	1.5	2		67.2		47.7	51.4	7.3	5.5	2.5
1300-64	64	-		2.65		4.5	1.5	2.5		68.2		48.7	52.4	7.3	5.2	2.5
1300-65	65	68		2.65		4.5	1.5	2.5		69.2		49.0	52.8	7.6	5.8	3.0
1300-67	67	70		2.65		4.5	1.5	2.5		72.5		50.8	54.6	7.7	6.0	3.0
1300-68	68	71		2.65		4.5	1.5	2.5		72.5		51.6	55.4	7.8	6.1	3.0

Every effort has been taken to ensure that the data listed in this catalogue is correct.
Finer Power Transmissions P/L will not accept liability for any damage or loss caused as a result of the data in this catalogue.

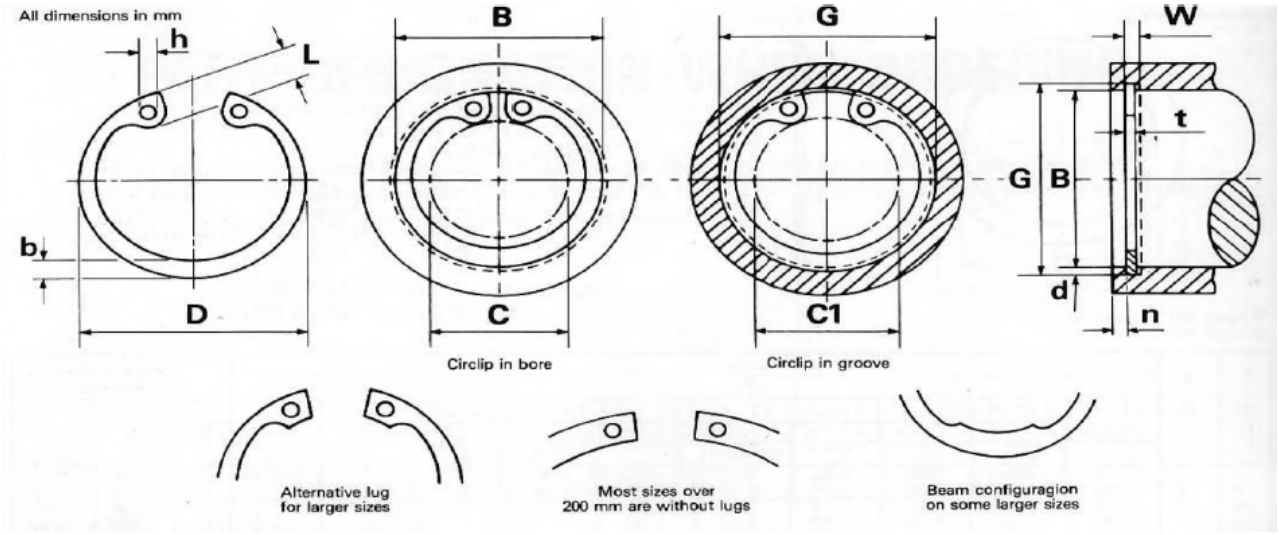

Stainless Steel Circlips - Internal																
SIZE CODE	BORE	GROOVE (G)						CIRCLIP (F)								
	B	G	Tol.	W	Tol.	n (min.)	d~	t	Tol.	D	Tol.	C	C1	L (max)	b~	h (min)
1300-70	70	73	(+)0.30 (-)0.00	2.65	(+)0.14 (-)0.00	4.5	1.5	2.5	(+)0.00 (-)0.07	74.5	(+)1.10 (-)0.46	53.6	57.4	7.8	6.2	3.0
1300-72	72	75		2.65		4.5	1.5	2.5		76.5		55.6	59.4	7.8	6.4	3.0
1300-75	75	78		2.65		4.5	1.5	2.5		79.5		58.6	62.4	7.8	6.6	3.0
1300-80	80	83.5	(+)0.35 (-)0.00	2.65	(+)0.18 (-)0.00	5.3	1.8	2.5	(+)0.00 (-)0.08	82.5	(+)1.30 (-)0.54	62.1	66.5	8.5	7.0	3.0
1300-85	85	88.5		3.15		5.3	1.8	3		90.5		66.9	71.3	8.6	7.2	3.5
1300-90	90	93.5		3.15		5.3	1.8	3		95.5		71.9	76.3	8.6	7.6	3.5
1300-95	95	98.5		3.15		5.3	1.8	3		100.5		76.5	80.9	8.8	8.1	3.5
1300-100	100	103.5		3.15		5.3	1.8	3		105.5		80.6	85.1	9.2	8.4	3.5

Every effort has been taken to ensure that the data listed in this catalogue is correct.
Finer Power Transmissions P/L will not accept liability for any damage or loss caused as a result of the data in this catalogue.